CH22-70060-B-A-01-05-Service (L319-12MY-JOB1P90)

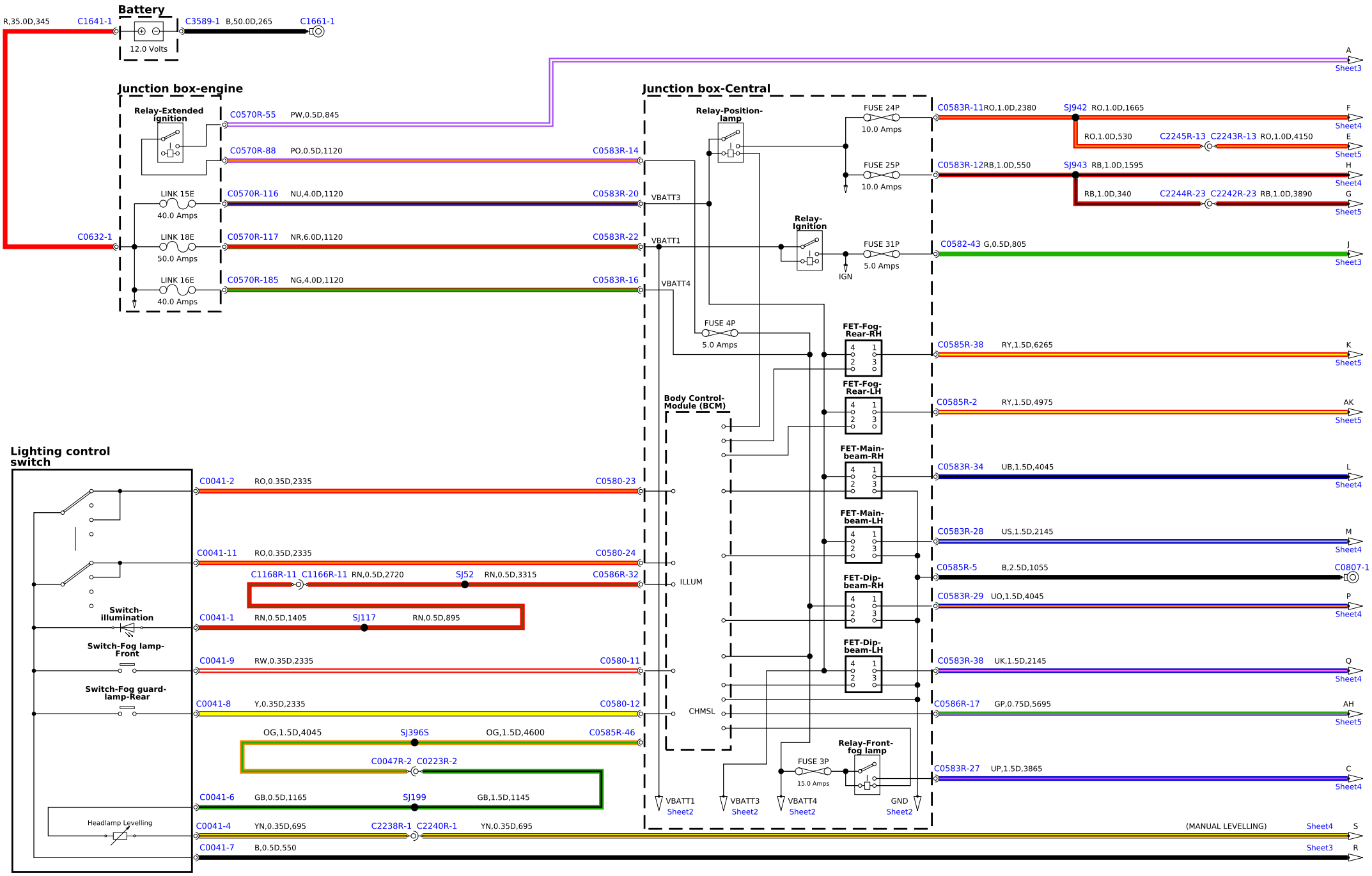

CH22-70060-B-A-02-05-Service (L319-12MY-jOB1P90)

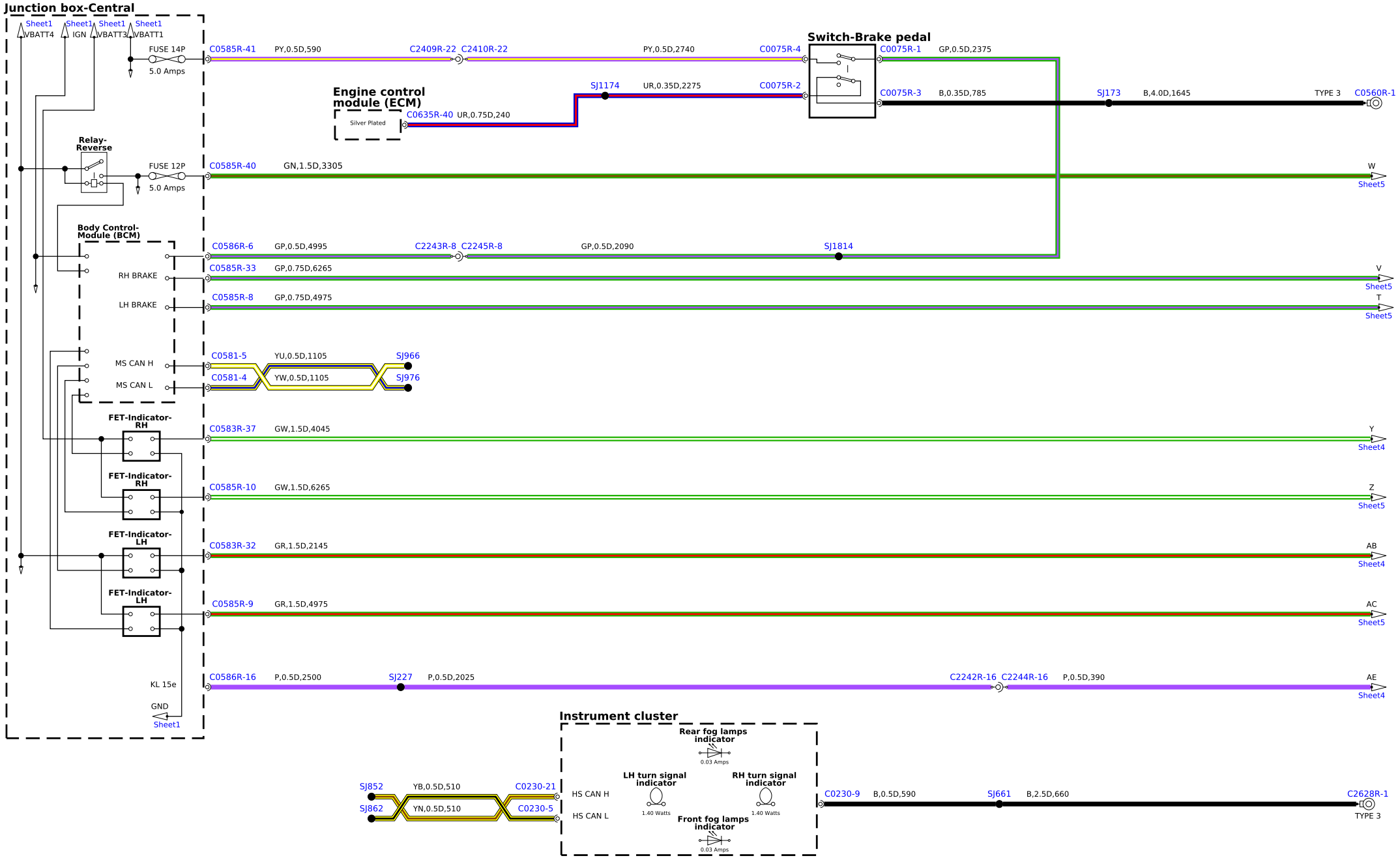

CH22-70060-B-A-03-05-Service (L319-12MY-JOB1P90)

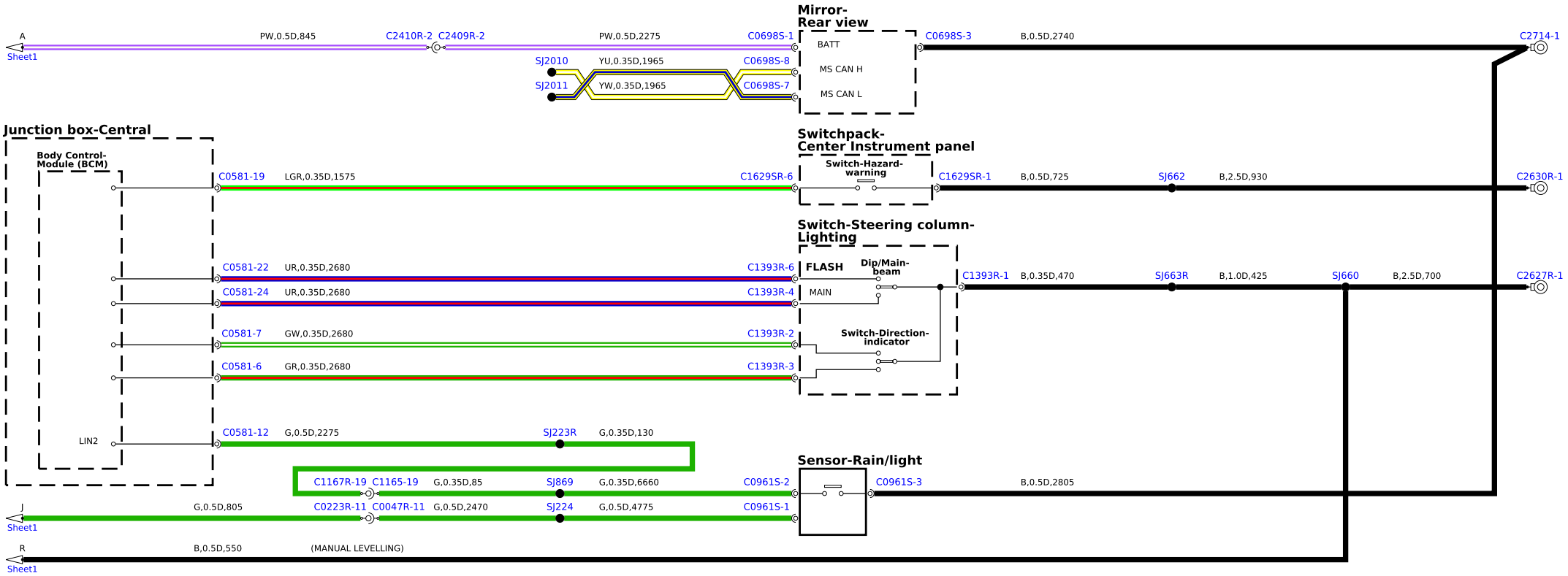

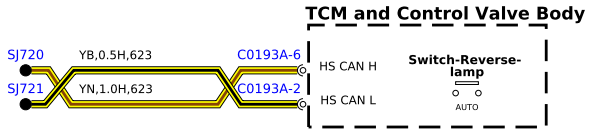

CH22-70060-8-A-04-05-Service (L319-12MY-JOB1P90)

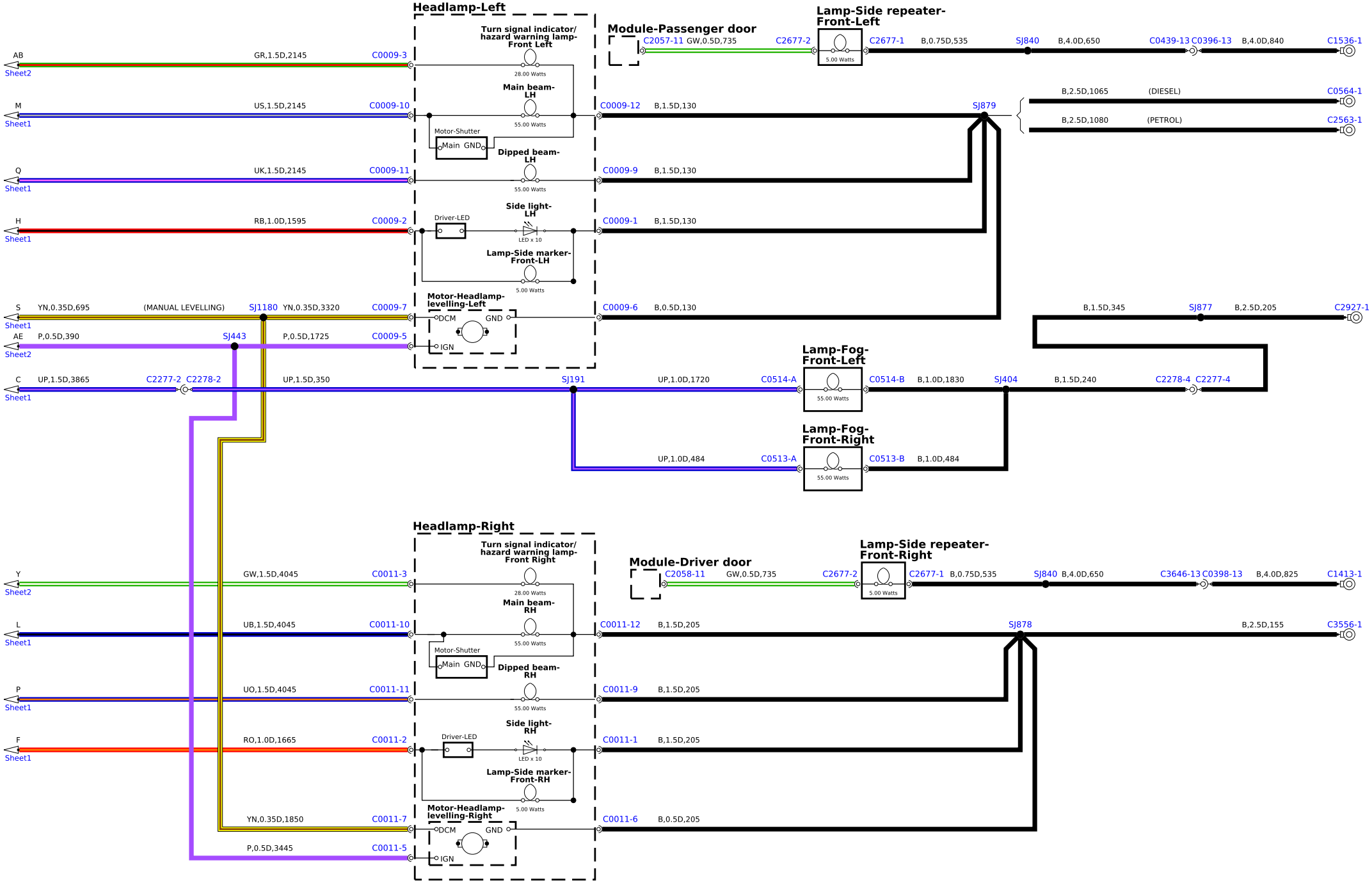
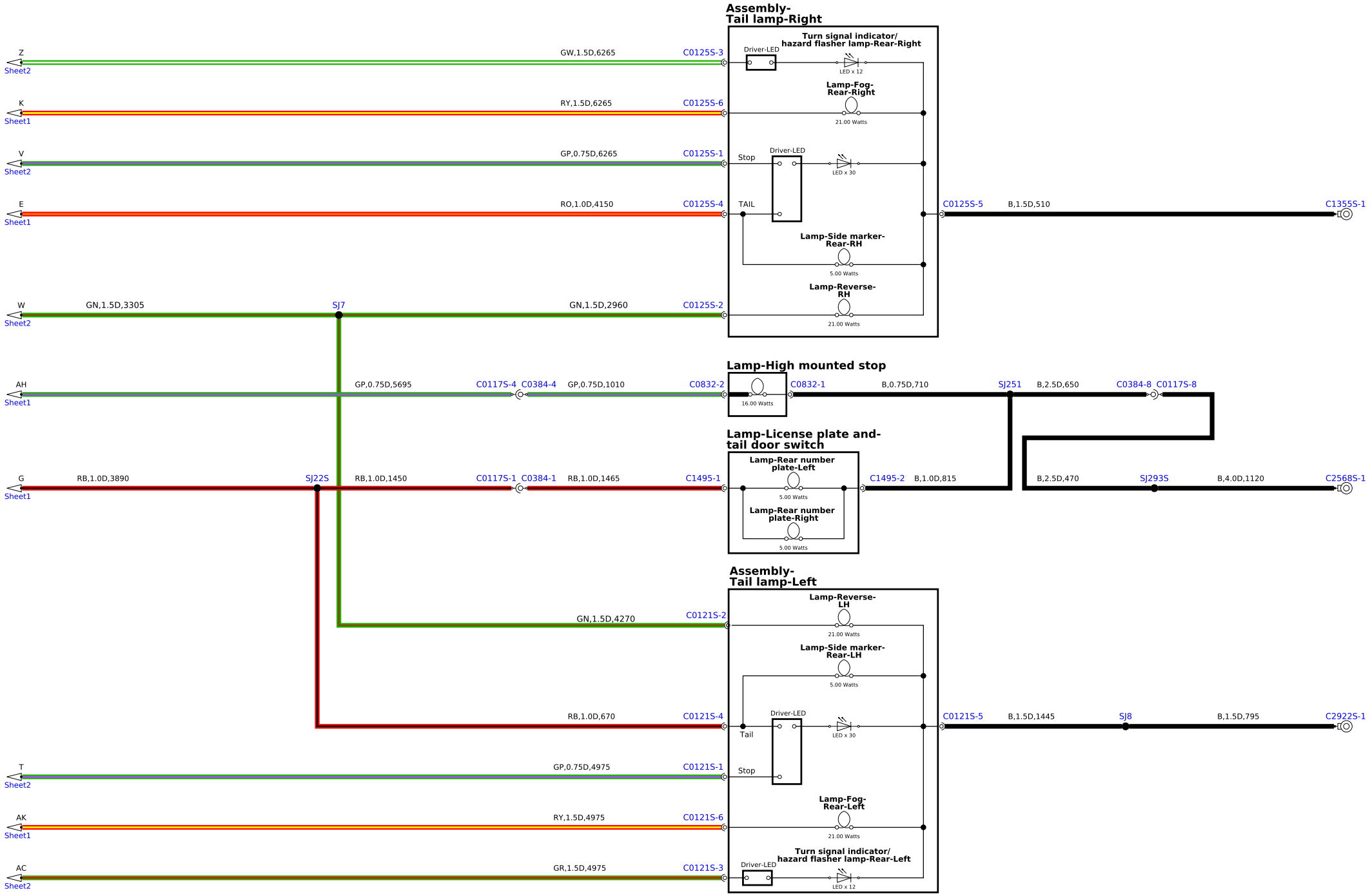
CH22-70060-B-A-05-05-Service (L319-12MY-JOB1P90)